Transfer or duplication of this document as well as the utilization or communication of its contents are prohibited unless explicit authorization is granted. Violations will be liable for compensation. All rights reserved for patent, utility model or designs registrations. 除非经书面授权，否则禁止转让、复制、利用、发表本文件的内容。侵犯者将负赔偿责任。本公司保留对专利及实用、美观新型和外观专利的所有权利。

未注公差/General tolerances(mm)														
0 ~ 3	>3 ~ 6	>6 ~ 10	>10 ~ 18	>18 ~ 30	>30 ~ 50	>50 ~ 80	>80 ~ 120	>120 ~ 180	>180 ~ 250	>250 ~ 315	>315 ~ 400	>400 ~ 500	>500	0.1/10
±0.12	±0.18	±0.22	±0.26	±0.31	±0.37	±0.57	±0.80	±0.93	±1.05	±1.15	±1.60	±2.20	±2.50	∠ ±2°

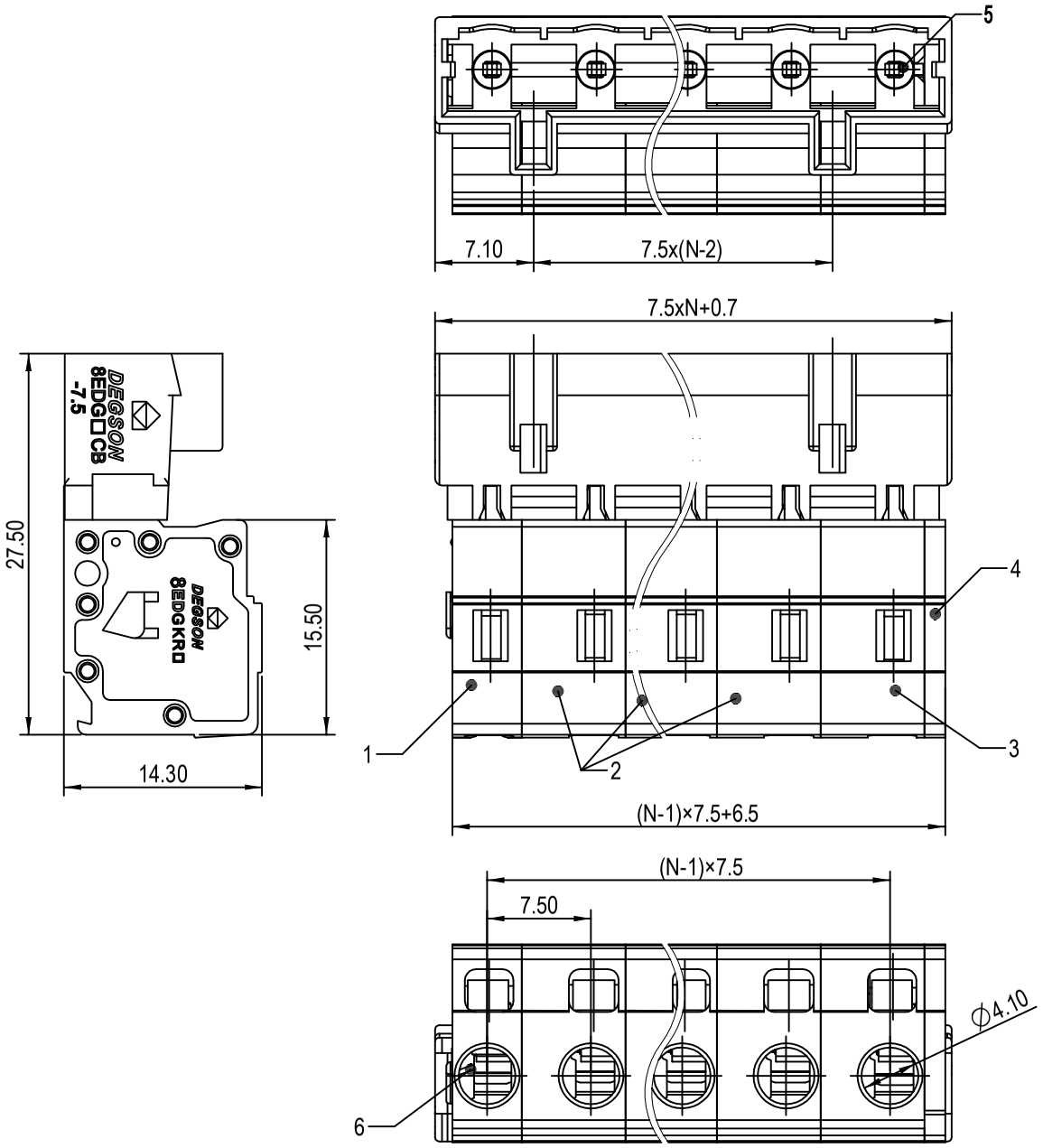

ITEM	NAME OF PART	MATERIAL	NOTES
7	Housing3	PA66	UL94V-0
6	Spring	Stainless Steel	/
5	Pin	Copper	Sn Plated
4	Cover	PA66	UL94V-0
3	Side Housing	PA66	UL94V-0
2	Housing2	PA66	UL94V-0
1	Housing1	PA66	UL94V-0

UL 标准/UL Standard:	B	C	D
额定电压/电流/Rated Voltage(V)/Current(A)	300/15	/	300/10
IEC 标准/IEC Standard:			
过压类别/Overvoltage Category/污染等级/Pollution Degre	III/3	III/2	II/2
额定电压/电流/Rated Voltage(V)/Current(A)	420/20	/	/
额定脉冲电压(KV)/Rate Impulse Voltage(KV)	4	/	/
线径范围(硬线和软线)/Wire Range(rigid and flexible)(AWG	22~14 / 0.2~2.5		
间距/Pitch(mm)/线数范围/Poles	7.5/N =02~12P		
使用温度范围/Operating temperature(°C)	-40~+105		
符合RoHS环保要求/Conform to RoHS	Yes		

REV	ECN	DESCRIPTION	DRFT	DATE
01		1x,图面纠错，修改针座刻字	周锡锦	2024.05.09

DEGSON

APPD:	兰春华	2024.05.10
CHKD:	龚耀志	2024.05.10
DRFT:	周锡锦	2024.05.09

A4 (inch)

MATERIAL: SURFACE/COLOR:

MAT NO./REV: / 00 MAT STATUS: 批量

NAME: 8EDGKRB-7.5-XXP-11-01A&Z(H)

DRAWING NO.	TYPE	DRAWING STATUS	SCALE	SHEET
200120219	CUSTOMER DRAWING	已发布	2:1	1/1